SKYFLOOR®

Modular Glass Deck System

Reinventing Decks With Walk On Glass

ICC-ES Evaluation Report ESR-5009

Glass Make-up

Glazing Option A:
10mm top layer - Low Iron Tempered LuxRaff Regular (Top)
1.52mm interlayer DG Structural
10mm middle layer - Low Iron Tempered (Middle)
1.52mm interlayer DG Structural
10mm bottom layer - Low Iron Tempered with back painted border (Bottom)

Glazing Option B:
10mm top layer - Low Iron Tempered NanoDot (Top)
1.52mm interlayer DG Structural
10mm middle layer - Low Iron Tempered (Middle)
1.52mm interlayer DG Structural
10mm bottom layer - Low Iron Tempered with back painted border (Bottom)

Patent #'s
US 10,294,662B1

GLASS FLOORING SYSTEMS INC

General Notes

A. These drawings are the sole property of Glass Flooring Systems, Inc. and may not be used or duplicated without written consent from Glass Flooring Systems, Inc.Glass Flooring Systems, Inc. assumes no responsibility for work and or errors incurred by other trades through the use of these drawings.
B. All items marked "by others" are not supplied by Glass Flooring Systems, Inc. and are shown for coordination and informational purposes only.
C. Perimeter anchors, shims, backer rod, finish sealants and installation are the responsibility of the installer.Glass Flooring Systems, Inc.shall not accept any responsibility for such materials.
D. Standard spacing between glass panels and between glass panels and frame are $\frac{3}{8}$"
E. User subject to "Terms and Conditions" in the user agreement for all products provided by Glass Flooring Systems Incorporate.

64" x 64" MULTI-PANEL GFS64X64LR & GFS64X64ND

Frame Components

Perimeter Frame Type

SkyFloor® Modular Glass Deck (Perimeter)

Cross Beam Type

3.5" SkyFloor® Modular Glass Deck (Flat Rafter Extrusion)

Frame Finish

Standard Black

MANUFACTURER	Glass Flooring Systems, Inc. 6 Aaron Way Unit 1 Sparta, NJ 07871
PROJECT	SkyFloor® Modular Glass Deck System - 64X64

ALL ELEVATIONS ARE VIEWED FROM EXTERIOR / NOT TO SCALE

DRAWN	DATE		SHEET
GFS	2/7/23	GFS64X64LR & GFS64X64ND	1 of 9

ICC-ES Evaluation Report ESR-5009

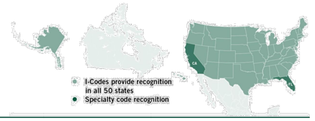

ICC-ES Evaluation Report
ESR-5009

Issued December 2022

This report is subject to renewal December 2023.

DIVISION: 09 00 00—FINISHES
Section: 09 62 83—Structural Glass Flooring

REPORT HOLDER:

GLASS FLOORING SYSTEMS, INC.

EVALUATION SUBJECT:

SKYFLOOR® MODULAR GLASS DECK SYSTEM

1.0 EVALUATION SCOPE

Compliance with the following codes:

2021, 2018 and 2015 International Building Code (IBC)

Property evaluated:

- Structural

2.0 USES

The SkyFloor® Modular Deck System has been shown to comply with IBC 2409.1 for use in exterior deck systems.

3.0 DESCRIPTION:

The SkyFloor® Modular Deck System components consist of glass panels, silicone, backer rod, EPDM setting blocks and aluminum frames (6063 T6). The glass panels must be continuously supported around the perimeter.

3.1 Glass Panels:

The laminated glass panels must comply with ASTM C1172 and comply with Category II of CPSC 16 CFR Part 1201 or Class A of ANSI Z97.1.

The individual layers of the laminated glass panels must be Kind FT fully tempered glass complying with ASTM C1048.

The PVB interlayers must have a minimum shear modulus of 60 psi for T ≤ 122ºF (0.414 MPa for T ≤ 50ºC).

The glass panels must consist of three glass layers and two interlayers. Each glass layer must have a nominal thickness of 0.394 inch (10.00 mm). The minimum actual thickness must not be less than 0.355 inch (9.02 mm). The PVB interlayers must have a minimum 0.060-inch (1.52 mm) thickness. The overall nominal thickness must be 1.30 inches (33.0 mm). The maximum size of the glass panels must be 32 inches by 48 inches (813 mm by 1219 mm).

The top glass layer may contain textured or other disruptive surface treatments and the capacity reductions have been taken in account as noted in ASTM E2751.

3.2 Silicone:

The silicone must comply with ASTM C920 Type S, Grade NS, Class 50, Use NT, G and A and ASTM C1184.

4.0 DESIGN AND INSTALLATION

4.1 Design:

The SkyFloor® Modular Deck System has an ASD allowable positive uniform live load capacity of 100 psf (4.8 KPa), an ASD allowable positive concentrated live load capacity of 300 lbs (1.33 kN) and an ASD allowable uniform wind load capacity of 20 psf (4.8 KPa). The maximum deflection at the allowable loads is less than L/175.

4.2 Installation:

Installation must comply with Figures 1 and 2. The glass panels must be continuously supported around the entire perimeter with a minimum 1.625 inch (41.3 mm) bearing width.

5.0 CONDITIONS OF USE

The SkyFloor® Modular Deck System described in this report complies with, or is a suitable alternative to what is specified in, those codes listed in Section 1.0 of this report, subject to the following conditions:

5.1 The following is outside the scope of this report: Use as skylights; slip resistance; fire-resistance rated construction; and classified roofing assemblies

5.2 Attachment of the aluminum perimeter framing to supporting construction along with the supporting construction itself is outside of the scope of this report.

5.3 All glass must be fully-tempered Type II laminated glass, with interlayers complying with Section 3.1. All glass must be fabricated and inspected in accordance with ASTM C1172. The glass fabricator must provide certification of compliance with ASTM C1172.

6.0 EVIDENCE SUBMITTED

6.1 Data in accordance with ASTM E2751, ASTM E1300, and ASTM E72.

ICC-ES Evaluation Reports are not to be construed as representing aesthetics or any other attributes not specifically addressed, nor are they to be construed as an endorsement of the subject of the report or a recommendation for its use. There is no warranty by ICC Evaluation Service, LLC, express or implied, as to any finding or other matter in this report, or as to any product covered by the report.

Copyright © 2022 ICC Evaluation Service, LLC. All rights reserved.

6.2 Quality documentation in accordance with the ICC-ES Acceptance Criteria for Quality Documentation (AC10), dated January 2019.

7.0 IDENTIFICATION

7.1 The ICC-ES mark of conformity, electronic labeling, or the evaluation report number (ICC-ES ESR-5009) along with the name, registered trademark, or registered logo of the report holder [and/or listee] must be included in the product label. [Electronic labeling is the ICC-ES web address (www.icc-es.org); specific URL related to the report; or the ICC-ES machine-readable code placed on the aforementioned items.]

7.2 In addition, the SkyFloor® Modular Deck System components are packaged with a label bearing the report holder's name; product description; and the mark of conformity. The evaluation report number (ICC-ES ESR-4885) may be used in lieu of the mark of conformity.

The glass panels must also be identified as specified in this report and the applicable code.

7.3 The report holder's contact information is the following:

GLASS FLOORING SYSTEMS, INC.
6 AARON WAY
SPARTA, NEW JERSEY 07871
(862) 701-5320
www.glassflooringsystems.com
wayne@glassflooringsystems.com

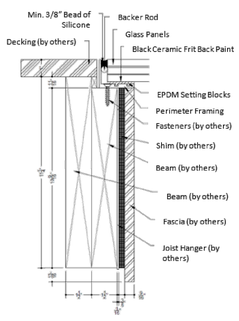

FIGURE 1 - PERIMETER DETAIL BETWEEN GLASS PANELS AND DECKING (except for silicone, dimensions are shown for illustrative purposes only)

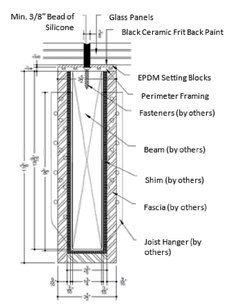

FIGURE 2 - PERIMETER DETAIL BETWEEN ADJACENT GLASS PANELS (except for silicone, dimensions are shown for illustrative purposes only)

ICC-ES Evaluation Report
ESR-5009 CBC Supplement

Issued December 2022

This report is subject to renewal December 2023.

DIVISION: 09 00 00—FINISHES
Section: 09 62 83—Structural Glass Flooring

REPORT HOLDER:

GLASS FLOORING SYSTEMS, INC.

EVALUATION SUBJECT:

SKYFLOOR® MODULAR GLASS DECK SYSTEM

1.0 REPORT PURPOSE AND SCOPE

Purpose:

The purpose of this evaluation report supplement is to indicate that the SkyFloor® Modular Deck System, described in ICC-ES evaluation report ESR-5009, has also been evaluated for compliance with the code(s) noted below.

Applicable code edition:

- 2022 *California Building Code* (CBC)

For evaluation of applicable chapters adopted by the California Office of Statewide Health Planning and Development (OSHPD) AKA: California Departement of Health Care Access and Information (HCAI) and Division of State Architect (DSA), see Sections 2.1.1 and 2.1.2 below.

2.0 CONCLUSIONS

2.1 CBC:

The SkyFloor® Modular Deck System, described in Sections 2.0 through 7.0 of the evaluation report ESR-5009, complies with CBC Chapters 16 and 24, provided the design and installation are in accordance with the 2021 *International Building Code®* (IBC) provisions noted in the evaluation report and the additional requirements of CBC Chapters 16 and 24, as applicable.

2.1.1 OSHPD: The applicable OSHPD Sections of the CBC are beyond the scope of this supplement.

2.1.2 DSA: The applicable DSA Sections of the CBC are beyond the scope of this supplement.

This supplement expires concurrently with the evaluation report, issued December 2022.

ICC-ES Evaluation Reports are not to be construed as representing aesthetics or any other attributes not specifically addressed, nor are they to be construed as an endorsement of the subject of the report or a recommendation for its use. There is no warranty by ICC Evaluation Service, LLC, express or implied, as to any finding or other matter in this report, or as to any product covered by the report.

Copyright © 2022 ICC Evaluation Service, LLC. All rights reserved.

ICC-ES Evaluation Report
ESR-5009 FBC Supplement

Issued December 2022

This report is subject to renewal December 2023.

DIVISION: 09 00 00—FINISHES
Section: 09 62 83—Structural Glass Flooring

REPORT HOLDER:

GLASS FLOORING SYSTEMS, INC.

EVALUATION SUBJECT:

SKYFLOOR® MODULAR GLASS DECK SYSTEM

1.0 REPORT PURPOSE AND SCOPE

Purpose:

The purpose of this evaluation report supplement is to indicate that SkyFloor® Modular Deck System, described in ICC-ES evaluation report ESR-5009, has also been evaluated for compliance with the codes noted below.

Applicable code editions:

- 2020 *Florida Building Code—Building*

2.0 CONCLUSIONS

The SkyFloor® Modular Deck System, described in Sections 2.0 through 7.0 of ICC-ES evaluation report ESR-5009, complies with the 2020 Florida Building Code—Building. The design requirements must be determined in accordance with the *Florida Building Code—Building*. The installation requirements noted in ICC-ES evaluation report ESR-5009 for the 2018 *International Building Code®* meet the requirements of the *Florida Building Code—Building*, as applicable.

Use of the SkyFloor® Modular Deck System for compliance with the High-Velocity Hurricane Zone provisions of the *Florida Building Code—Building* has not been evaluated, and is outside the scope of this supplemental report.

For products falling under Florida Rule 61G20-3, verification that the report holder's quality assurance program is audited by a quality assurance entity approved by the Florida Building Commission for the type of inspections being conducted is the responsibility of an approved validation entity (or the code official when the report holder does not possess an approval by the Commission).

This supplement expires concurrently with the evaluation report, issued December 2022.

ICC-ES Evaluation Reports are not to be construed as representing aesthetics or any other attributes not specifically addressed, nor are they to be construed as an endorsement of the subject of the report or a recommendation for its use. There is no warranty by ICC Evaluation Service, LLC, express or implied, as to any finding or other matter in this report, or as to any product covered by the report.

Copyright © 2022 ICC Evaluation Service, LLC. All rights reserved.

GLASS FLOORING SYSTEMS INC

MANUFACTURER	Glass Flooring Systems, Inc. 6 Aaron Way Unit 1 Sparta, NJ 07871		
PROJECT	SkyFloor® Modular Glass Deck System - 64X64		
ALL ELEVATIONS ARE VIEWED FROM EXTERIOR / NOT TO SCALE			
DRAWN: GFS	DATE: 2/7/23	GFS64X64LR & GFS64X64ND	SHEET: 2 of 9

64X64 MULTI-PANEL UNIT

GFS64X64LR AND GFS64X64ND

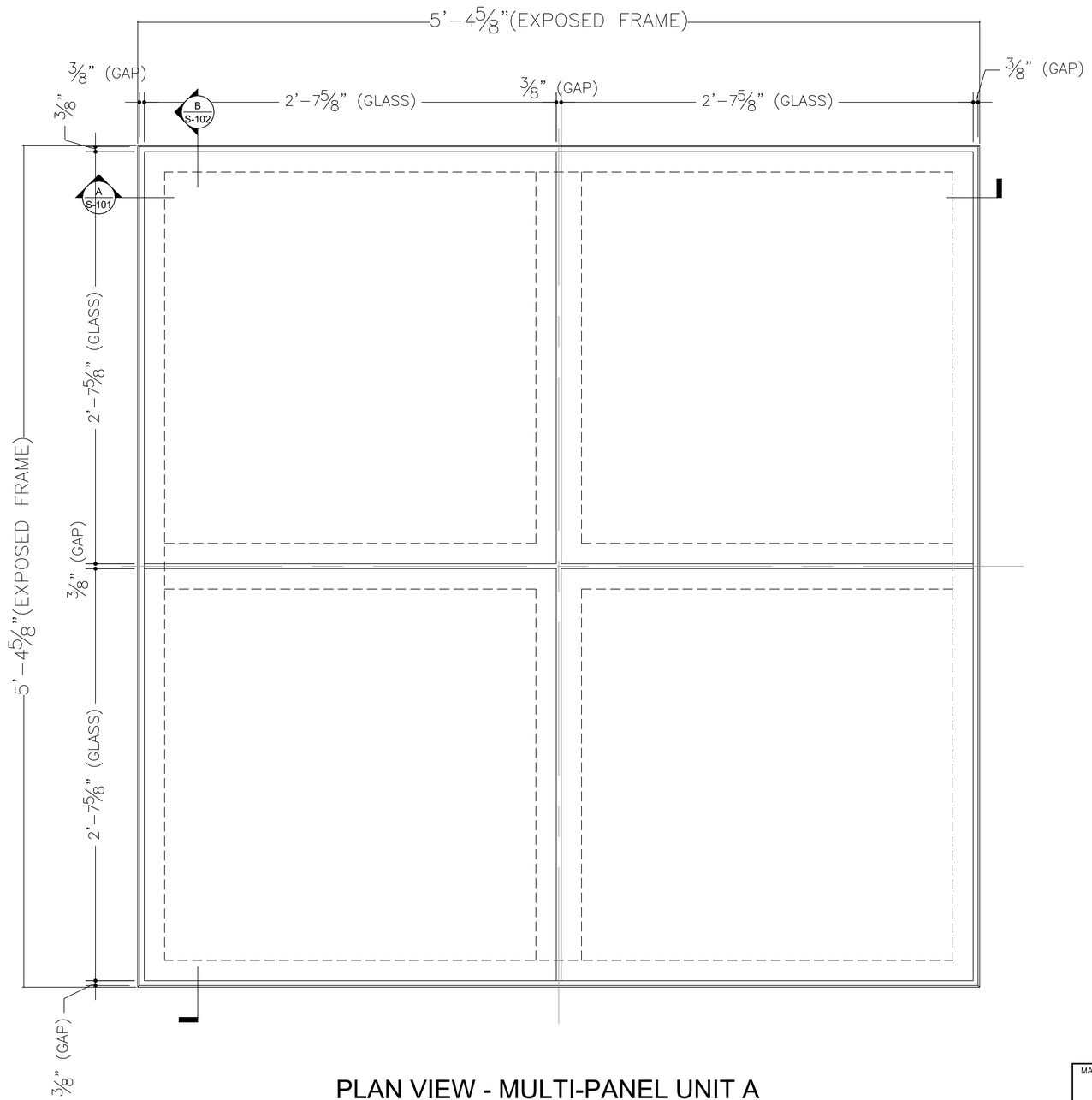

PLAN VIEW - MULTI-PANEL UNIT A

GLASS FLOORING SYSTEMS INC

MANUFACTURER	Glass Flooring Systems, Inc. 6 Aaron Way Unit 1 Sparta, NJ 07871
PROJECT	SkyFloor® Modular Glass Deck System - 64X64

ALL ELEVATIONS ARE VIEWED FROM EXTERIOR / NOT TO SCALE

DRAWN	DATE			SHEET
GFS	2/7/23	GFS64X64LR & GFS64X64ND	P-101	3 of 9

64X64 MULTI-PANEL UNIT

GFS64X64LR AND GFS64X64ND

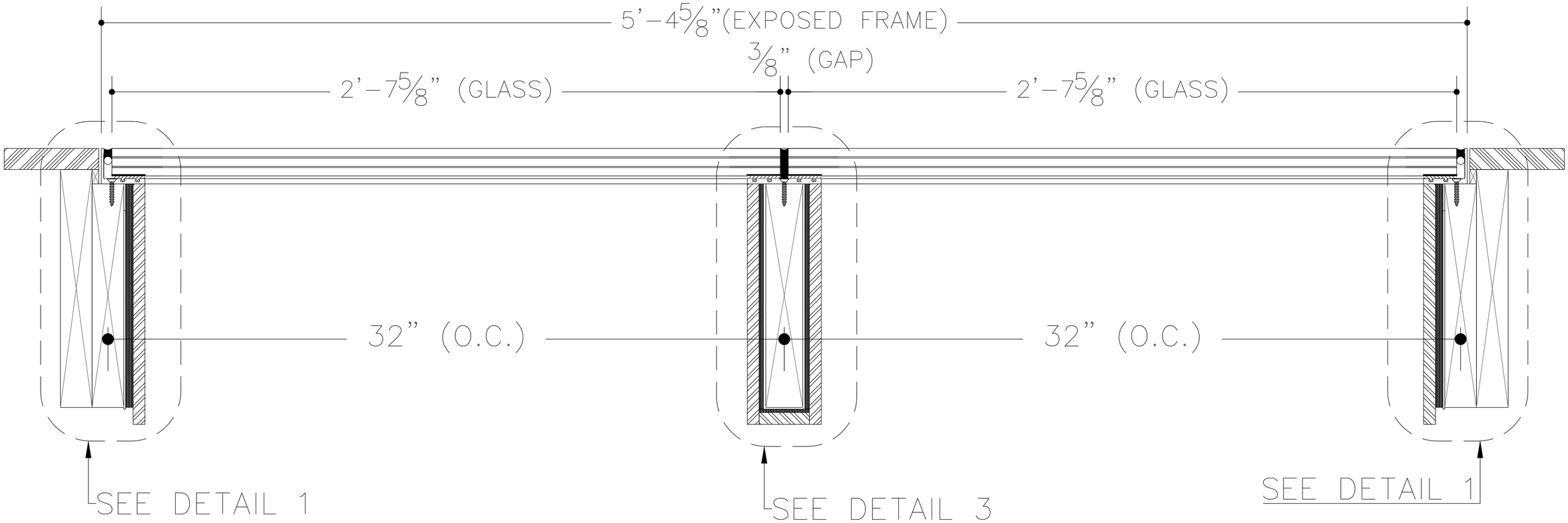

SECTION A - MULTI-PANEL UNIT A

SUPPORT DECK FRAMING
SHOWN FOR EXAMPLE ONLY
PLEASE REFER TO DECK BUILDER FOR
ACCURATE FRAMING DETAIL

GLASS FLOORING SYSTEMS INC

MANUFACTURER	Glass Flooring Systems, Inc. 6 Aaron Way Unit 1 Sparta, NJ 07871
PROJECT	SkyFloor® Modular Glass Deck System - 64X64

ALL ELEVATIONS ARE VIEWED FROM EXTERIOR / NOT TO SCALE

DRAWN	DATE		SHEET
GFS	2/7/23	GFS64X64LR & GFS64X64ND S-101	4 of 9

64X64 MULTI-PANEL UNIT

GFS64X64LR AND GFS64X64ND

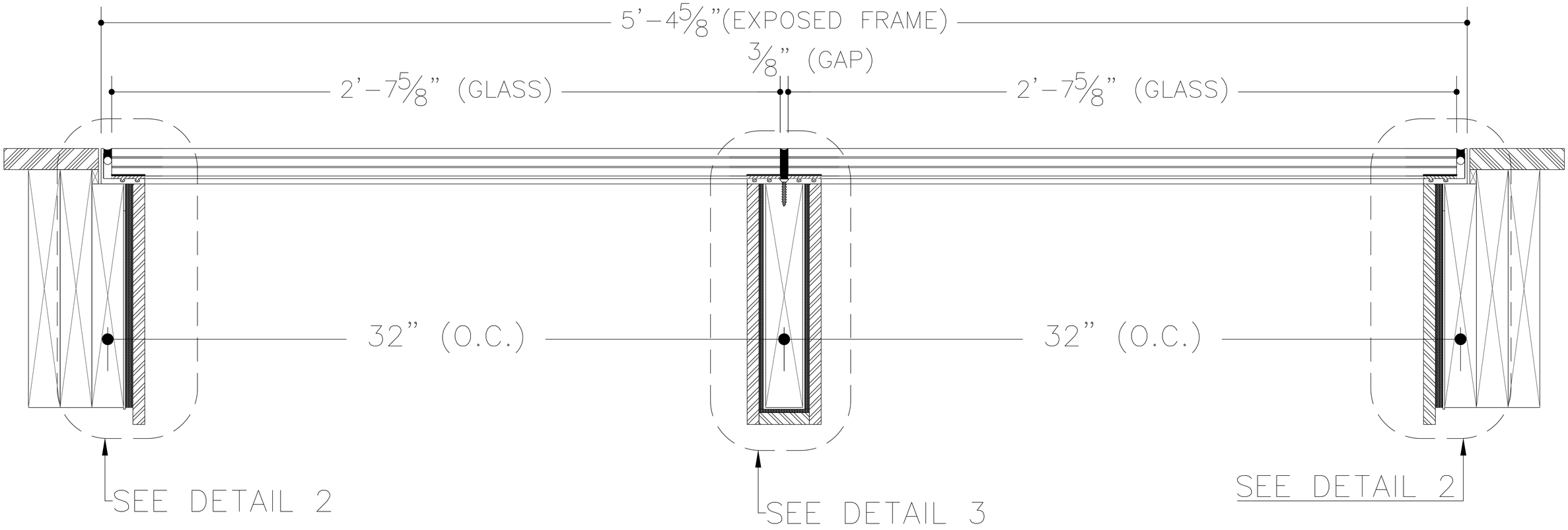

SECTION B - MULTI-PANEL UNIT A

SUPPORT DECK FRAMING
SHOWN FOR EXAMPLE ONLY
PLEASE REFER TO DECK BUILDER FOR
ACCURATE FRAMING DETAIL

GLASS FLOORING SYSTEMS INC

MANUFACTURER	Glass Flooring Systems, Inc. 6 Aaron Way Unit 1 Sparta, NJ 07871
PROJECT	SkyFloor® Modular Glass Deck System - 64X64

ALL ELEVATIONS ARE VIEWED FROM EXTERIOR / NOT TO SCALE

DRAWN	DATE		SHEET
GFS	2/7/23	GFS64X64LR & GFS64X64ND S-102	5 of 9

64X64 MULTI-PANEL UNIT

GFS64X64LR AND GFS64X64ND

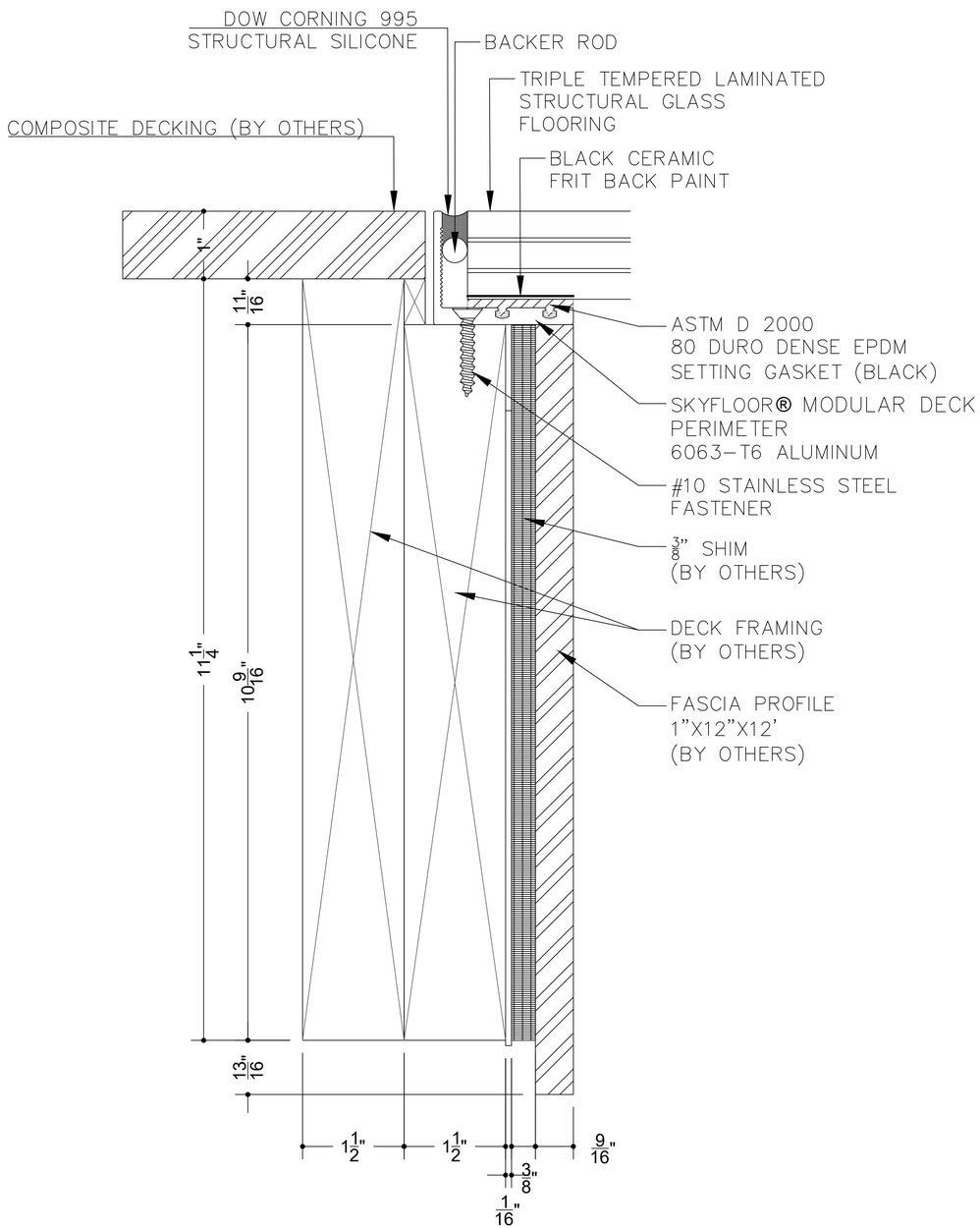

DETAIL 1 - SKYFLOOR® MODULAR GLASS DECK PERIMETER

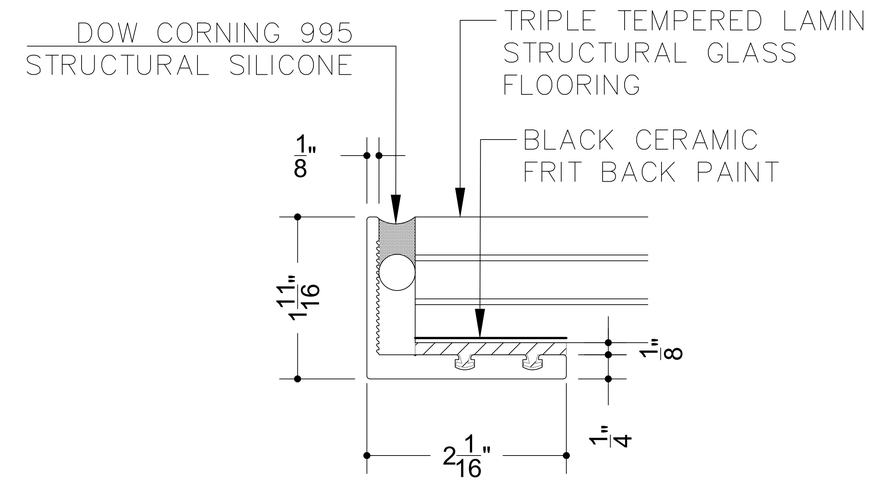

DETAIL - SKYFLOOR® MODULAR GLASS DECK PERIMETER

SUPPORT DECK FRAMING
SHOWN FOR EXAMPLE ONLY
PLEASE REFER TO DECK BUILDER FOR
ACCURATE FRAMING DETAIL

GLASS FLOORING SYSTEMS INC

MANUFACTURER	Glass Flooring Systems, Inc. 6 Aaron Way Unit 1 Sparta, NJ 07871
PROJECT	SkyFloor® Modular Glass Deck System - 64X64

ALL ELEVATIONS ARE VIEWED FROM EXTERIOR / NOT TO SCALE

DRAWN	DATE		SHEET
GFS	2/7/23	GFS64X64LR & GFS64X64ND S-103	6 of 9

64X64 MULTI-PANEL UNIT

GFS64X64LR AND GFS64X64ND

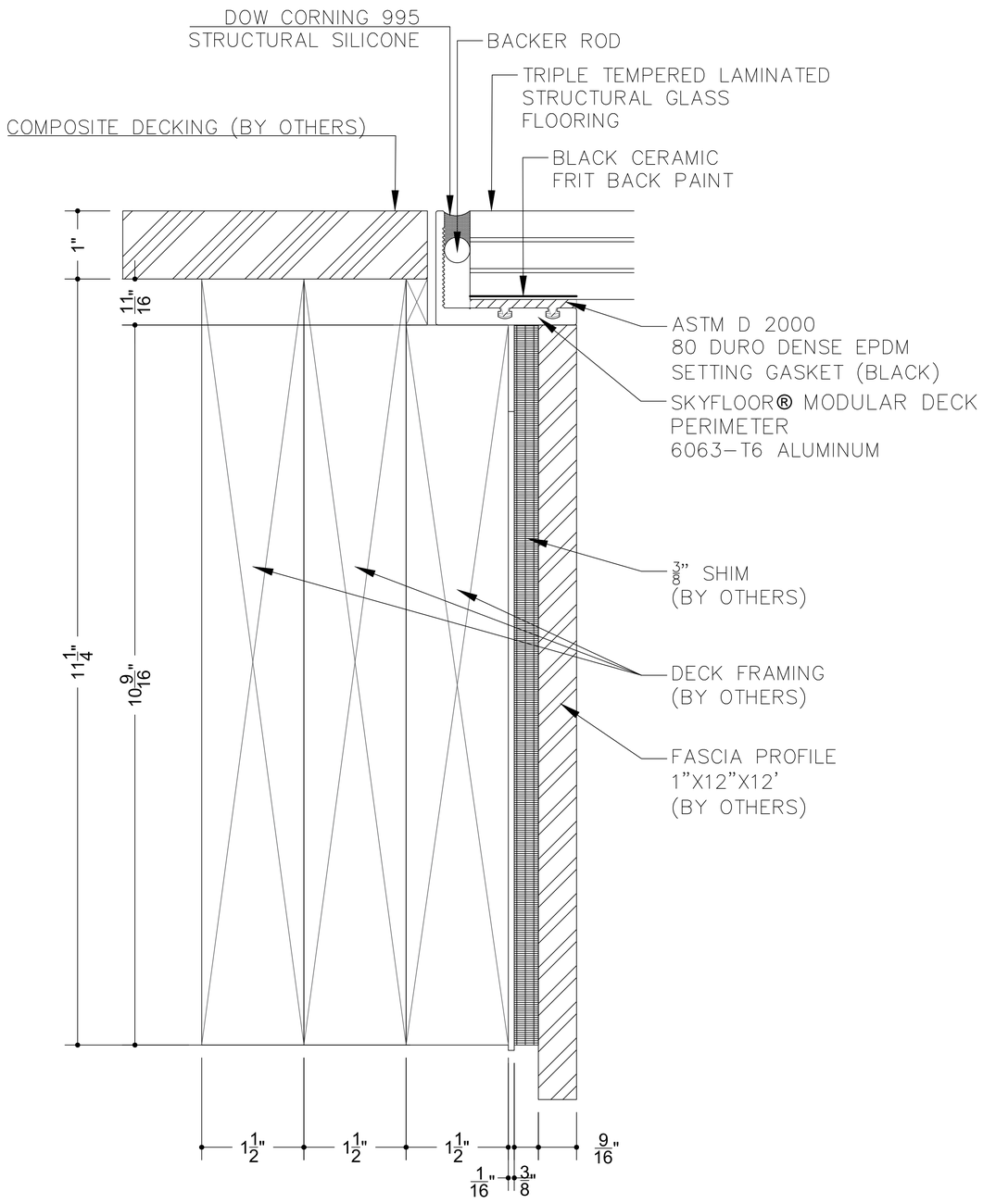

DETAIL 2 - SKYFLOOR® MODULAR GLASS DECK PERIMETER

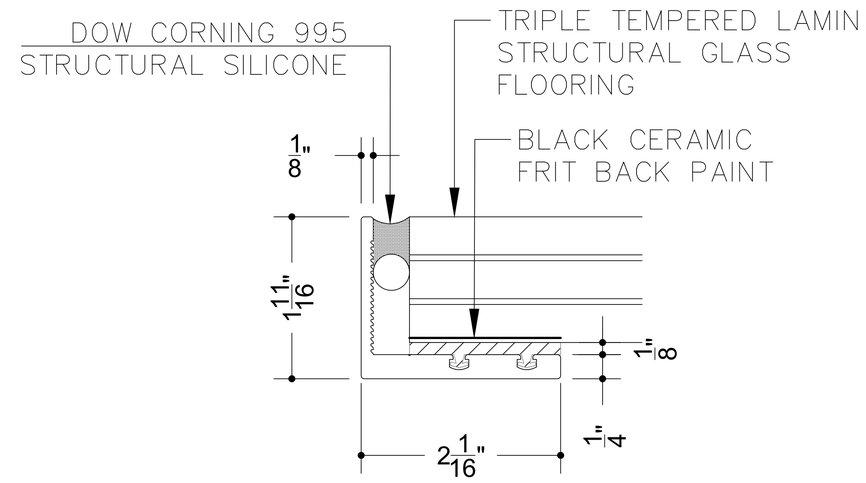

DETAIL - SKYFLOOR® MODULAR GLASS DECK PERIMETER

SUPPORT DECK FRAMING
SHOWN FOR EXAMPLE ONLY
PLEASE REFER TO DECK BUILDER FOR
ACCURATE FRAMING DETAIL

GLASS FLOORING SYSTEMS INC

MANUFACTURER	Glass Flooring Systems, Inc. 6 Aaron Way Unit 1 Sparta, NJ 07871
PROJECT	SkyFloor® Modular Glass Deck System - 64X64

ALL ELEVATIONS ARE VIEWED FROM EXTERIOR / NOT TO SCALE

DRAWN	DATE			SHEET
GFS	2/7/23	GFS64X64LR & GFS64X64ND	S-104	7 of 9

64X64 MULTI-PANEL UNIT

GFS64X64LR AND GFS64X64ND

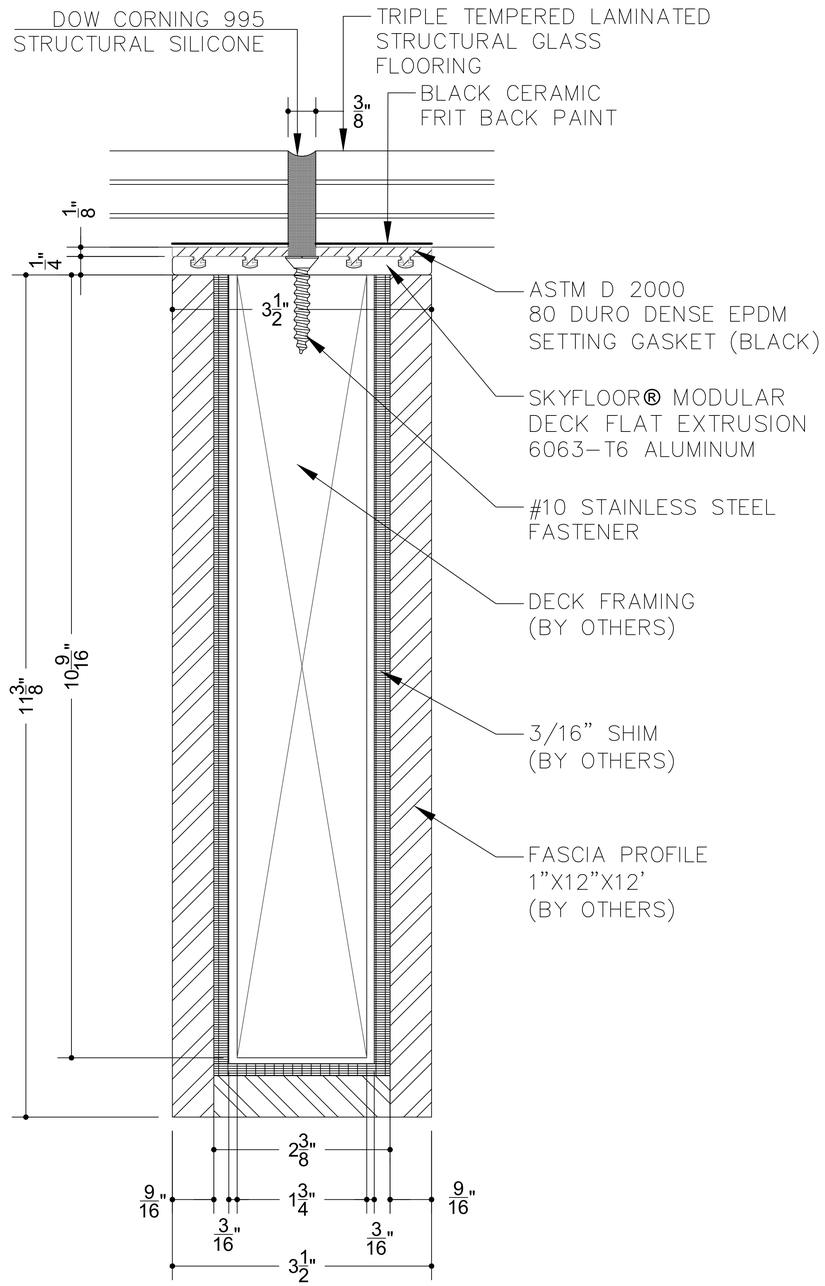

DETAIL 3 - SKYFLOOR® MODULAR GLASS DECK
FLAT RAFTER EXTRUSION WITH
EDPM SETTING GASKET

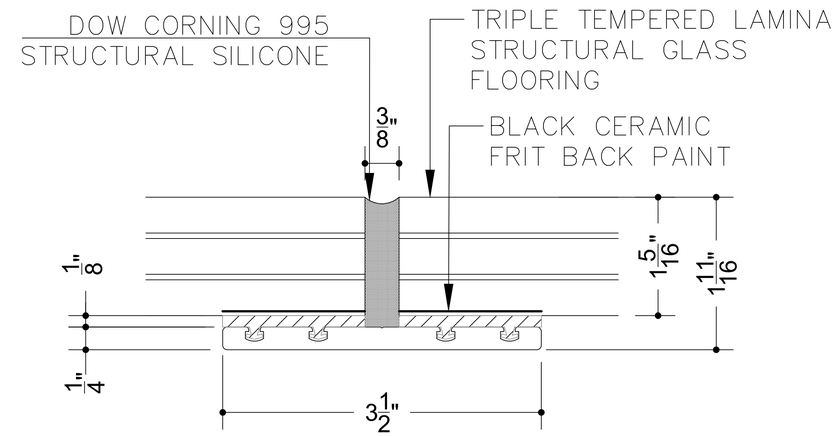

DETAIL - SKYFLOOR® MODULAR GLASS DECK
FLAT RAFTER EXTRUSION WITH
EDPM SETTING GASKET

SUPPORT DECK FRAMING
SHOWN FOR EXAMPLE ONLY
PLEASE REFER TO DECK BUILDER FOR
ACCURATE FRAMING DETAIL

GLASS FLOORING SYSTEMS INC

MANUFACTURER	Glass Flooring Systems, Inc. 6 Aaron Way Unit 1 Sparta, NJ 07871
PROJECT	SkyFloor® Modular Glass Deck System - 64X64

ALL ELEVATIONS ARE VIEWED FROM EXTERIOR / NOT TO SCALE

DRAWN	DATE		SHEET
GFS	2/7/23	GFS64X64LR & GFS64X64ND S–105	8 of 9

64X64 MULTI-PANEL UNIT

GFS64X64LR AND GFS64X64ND

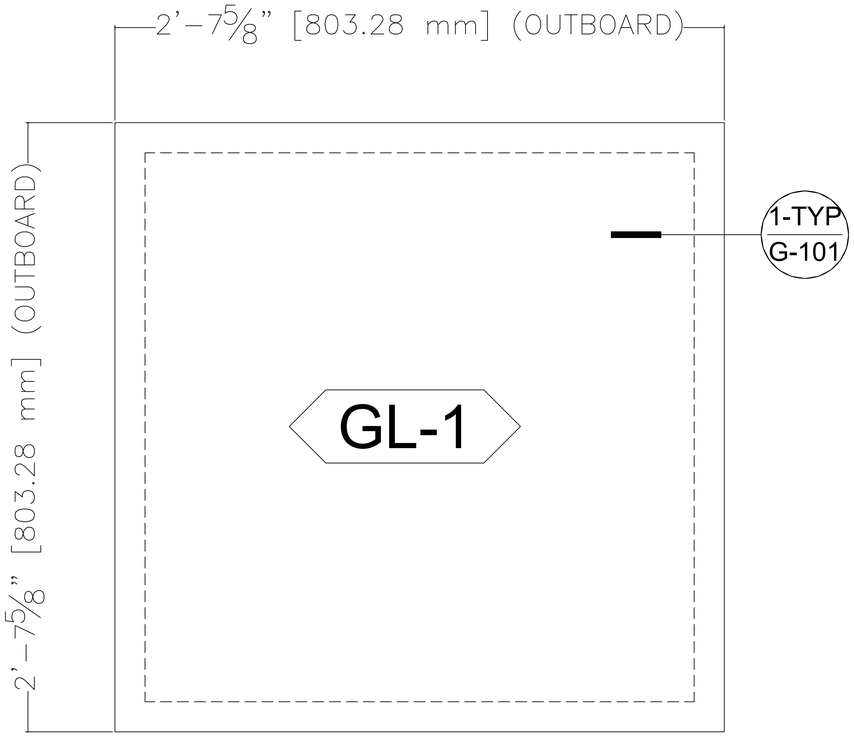

PLAN VIEW - MULTI-PANEL UNIT A GLASS (QTY 4)

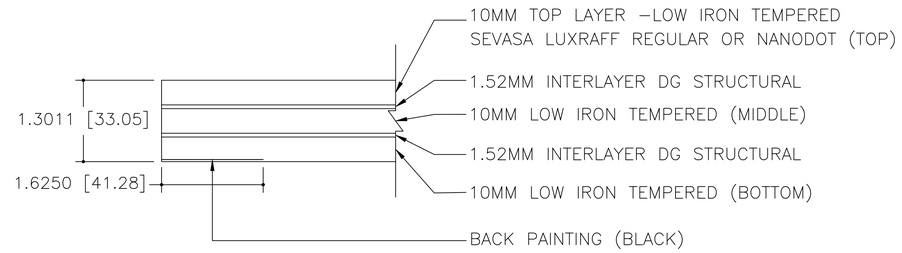

DETAIL - GLASS ASSEMBLY

GLASS TEXTURES

- LUXRAFF® REGULAR
- NANODOT®

GLASS FLOORING SYSTEMS INC

MANUFACTURER	Glass Flooring Systems, Inc. 6 Aaron Way Unit 1 Sparta, NJ 07871
PROJECT	SkyFloor® Modular Glass Deck System - 64X64

ALL ELEVATIONS ARE VIEWED FROM EXTERIOR / NOT TO SCALE

DRAWN	DATE			SHEET
GFS	2/7/23	GFS64X64LR & GFS64X64ND	G-101	9 of 9